FAUCET AERATORS

PART #	DESCRIPTION
40110124	13/16 Slotless male aerator
40110125	13/16 Slotless female aerator
40110144	15/16 Slotless male aerator
40110130	15/16 Slotless female aerator
40110149	15/16 Slotless dual thread aerator
40110150	15/16 Slotless dual thread aerator – polished brass
40110135	13/16 Slotted male aerator
45972032	15/16 male .5 gpm aerator – vandal proof w/ rotating sleeve
40110151	15/16 female .5 gpm aerator – vandal proof w/ rotating sleeve
40110055	15/16 Slotted male aerator
45972025	13/16 Slotted female aerator
40110132	15/16 Slotted female aerator
40110145	15/16 Slotted dual thread aerator
45972020	13/16 Male vandal proof w/ rotating sleeve
40110166	15/16 Male vandal proof w/ rotating sleeve
40110183	13/16 Male moderator 2.0 gpm
45972075	13/16 Female moderator 2.0 gpm
40110189	15/16 Dual thread moderator 2.0 gpm
45163043	Aerator parts kit - for large male & female

40110124
40110144

40110125
40110130

40110149

40110055
40110135

45971010
45972025

40110145

Moderator
45972075

VP Ultra Low
Flow .5 gpm
40110151

VP aerator w/
rotating sleeve

Wrench

FAUCET SPRAYS

PART #	DESCRIPTION
45163004	Swivel spray aerator w/ C.P. brass upper section and white plastic lower section.
45163008	Same as 45163004 except white plastic upper & lower sections.
40110103	Swing-N-Spray aerator, C.P. brass & white plastic w/ male thread adapter
45003005	Kitchen faucet swivel spray (white)
40950124	Kitchen faucet swivel spray (black)

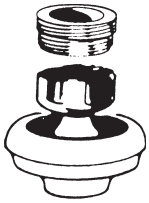
45163004

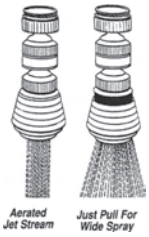

45003005/40950124

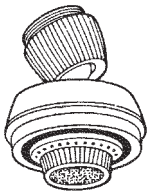
45163008

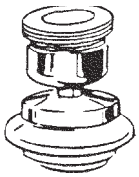
40110103

SPECIAL AERATORS

PART #	DESCRIPTION
45162042	Swivel aerator – dual thread
45972025	Small female aerator 3/4" x 27 thrd.
45163030	Male aerator 3/8" IPS thread
45163036	Female aerator 3/4" hose thread
45164006	Male aerator 11/16" x 27 thread (Chicago Faucet)
40110111	Female aerator 13/64" x 24 "SoftFlo" Chicago Faucet

45162042

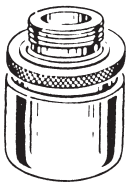
45163030

45164006

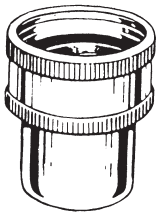
45163036

AERATOR ADAPTERS

Lower section fits standard female aerator unless otherwise specified

ITEM	PART #	DESCRIPTION
1	45162002	15/16 X 27 Thread, male adapter (Delta, A/S)
2	45162004	15/16 x 16 Thread, male adapter
3	40110120	3/8" IPS Thread, male adapter (Youngstown, Milwaukee)
4	45162014	3/8" IPS Thread, female adapter

1

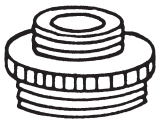
2

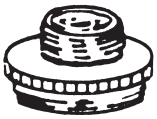
3

4

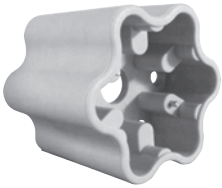

VANDAL WRENCH
PART # 40110026

AERATOR WRENCH
PART # 40110027

TOTAL MAINTENANCE SOLUTIONS

HOUSTON 800/392-5066
ORLANDO 800/327-3022
GREENVILLE 800/476-2212

LOOK FOR US ON THE WEB AT: www.TMSSouth.com

FAUCET REPAIR

AERATOR ADAPTERS (CONTINUED)

Lower section fits standard female aerator unless otherwise specified

ITEM	PART #	DESCRIPTION
1	14890560	17/32 X 27 Thread, female (Sayco), lower section thread for std. male aerator
2	45162028	Universal slip-over adapter-2 sleeves-middle section for 3/4" hose thread. Lower section for standard female aerator
3	40110164	Hose adapter, upper section dual thread – lower section 3/4" hose thread
4	45162040	Hose adapter, upper section 13/16 x 27 thread male – lower 3/4" hose thread
5	40110122	13/16 x 24 Thread, female adapter (Chicago Faucet)
6	45163034	11/16 x 27 Thread, male adapter (Chicago Faucet)
7	45163038	3/4" Hose thread, female adapter
8	40110121	13/16 x 27 thread, male adapter – metal
9	45163042	3/4 x 27 Thread female adapter (Kohler, Price Pfister)
10	40110138	Standard female aerator thrds. x 3/4" male hose thread
11	40110123	Faucet to hose adapter-upper section dual thread aerator. Lower section takes standard female aerator or 3/4" hose thread
	45972060	55/64" female x 15/16" female (not shown)

1

2

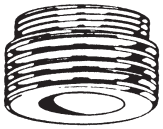
3

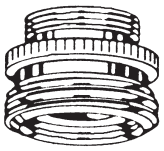
4

5

6

7

8

9

10

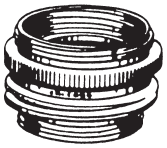
11

AERATORS ADAPTERS (CONTINUED)

Lower section fits standard female aerator unless otherwise specified

ITEM	PART #	DESCRIPTION
1	45162044	Small snap fitting, dual threads (55/64 & 15/64)
2	45163013	Small snap fitting, female 3/4 x 27 thread (P.P. & Kohler)
3	45163019	Small snap fitting, 3/4" female hose thread
4	45163022	Large snap fitting, w/ adapter for dual aerator thread (55/64 & 15/16) (Sears, Wards, & Whirlpool)
5	45724006	Small Whirlpool snap fitting w/ adapter for dual aerator thread (55/64 & 15/16)
6	45724008	G.E. & Westinghouse snap fitting w/ adapter for dual aerator thread (55/64 & 15/16)
7	45163012	Snap coupler set, small snap fitting 3/4" female hose thread and snap coupler 3/4" male hose thread
8	45163002	Large snap coupler with 3/4" male hose threads
9	45163023	Small snap coupler with 3/4" male hose threads

1

2

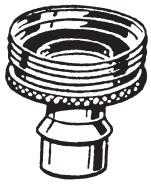
3

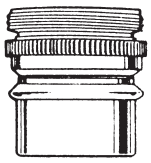
4

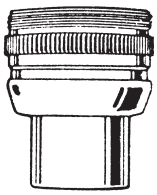
5

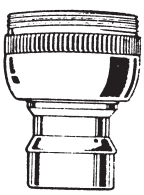
6

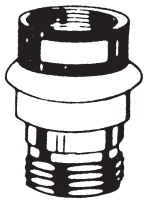
7

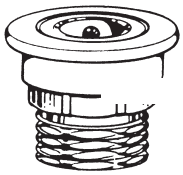
8

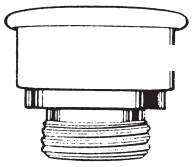
9

SINK SPRAYERS

ITEM	PART #	DESCRIPTION
1	40110165	Hose & spray head with adapter (1/4" female or 1/8" male)
	40110195	Economy hose & spray – black
	45731159	Economy hose & spray – almond
	45731160	Economy hose & spray – white
	45731012	Hose & spray head with 1/4" union nut and nipple connection.
2	40110142	Spray head only – black
	45731007	Spray head only – white
3	45731003	Shampoo spray head only
4	40110200	4 foot replacement hose with universal cplng.
	45731006	4 foot replacement hose with 1/4" union nut and nipple connection.
5	45731014	Adapter coupling nut adapter 1/4"x 1/8"
6	45731002	Hose guide – black
	45731001	Hose guide – white
	45731000	Hose guide – almond

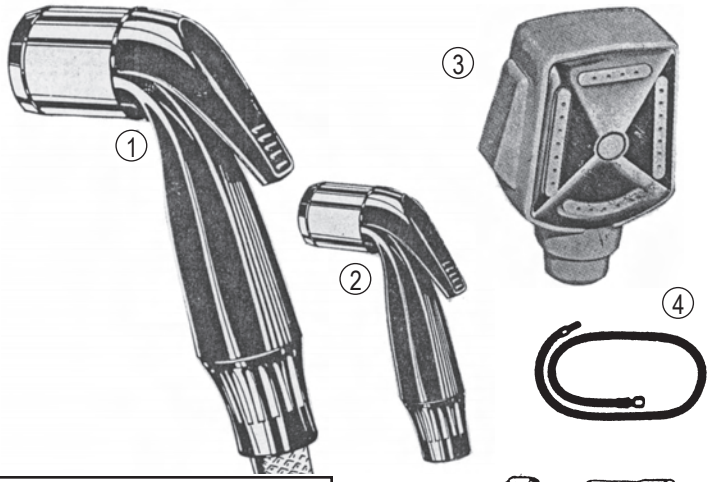

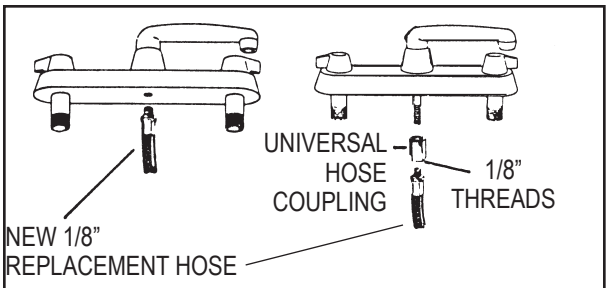

Use 40110165 Hose & Spray Head Assembly or 40110200 Replacement Hose

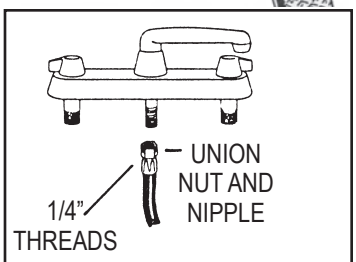

Use 45731012 Hose & Spray or 45731006 Replacement Hose

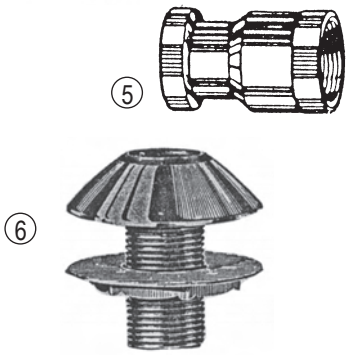

SINK HANGERS

ITEM	PART #	DESCRIPTION
1	34160200	Universal Sink Hanger. Three sizes of notches makes it adaptable for most any style of sink.
2	40110202	Fits most types of basins
3	34160230	China lavatory hanger bracket
4	34160240	Double notch sink hanger - 10" centers

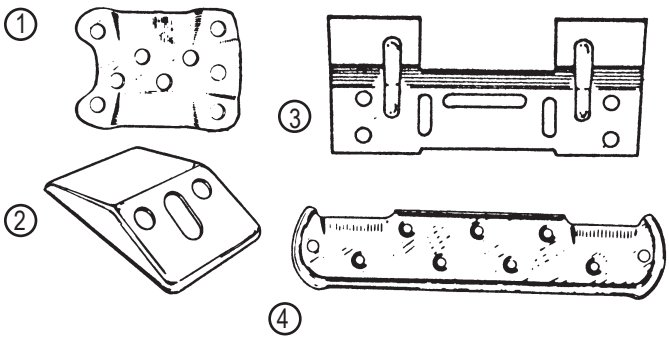

TOGGLE BOLTS

PART #	SIZE	DRILL SIZE	STD. BOX
50300357	1/8"x 3"	1/2"	50
50300364	1/4"x 3"	3/4"	50

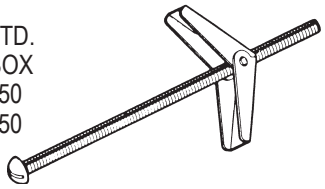

FAUCET HOLE COVER-UP PLATES

ITEM #	DESCRIPTION
44162008	1-1/2 CP Snap-in cover
40110141	2" Bolt style cover
40110181	1-3/4" Bolt style cover
44005010	P/B Faucet hole cover
44001000	Mirror cover plate, 1H
44001010	Mirror cover plate, tub spout
44001023	Mirror cover plate, 2H
44001024	Mirror cover plate, 3H
44001110	CP cover plate, tub spout
40950121	CP cover plate, one-hole
44001124	CP cover plate, 3/2 hole

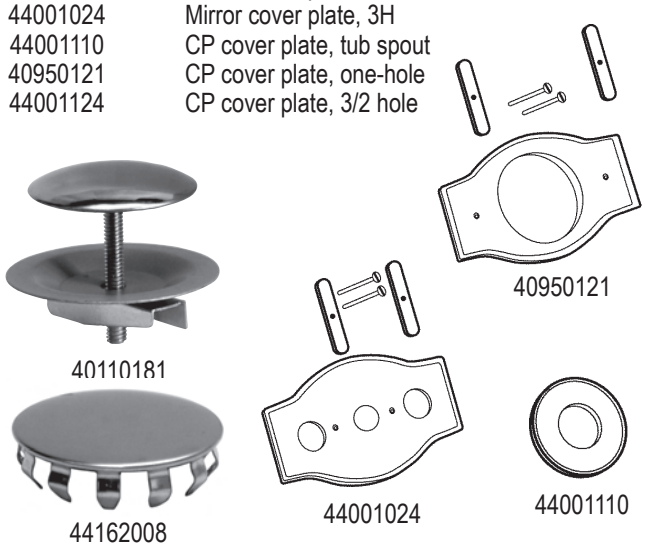

TOTAL MAINTENANCE SOLUTIONS

HOUSTON 800/392-5066
ORLANDO 800/327-3022
GREENVILLE 800/476-2212

LOOK FOR US ON THE WEB AT: www.TMSSouth.com

FAUCET REPAIR

ITEM	PART #	APPLICATION*
1	45732002	American Kitchen 4203, Briggs 6830, Nibco 86099
2	40130603	Am. Kit. 5275 (plus item 4), Am. Std. 696-17,55275-07 (plus item 4), Central Brass 166E, 166DE (plus item 3), Eljer 4242 (plus item 3), Elkay 13010, Gerber 94-050, Kohler 54904, Sterling S-4904, Union Brass 405 (plus item 4), Wolverine 51862.
3	40130604	Am. Std. 697-17, Central Brass 166D (w/o bottom gasket), Eljer 4242 (plus item 2), Gerber 94-051 (w/ bottom gasket), Kohler 39867.
4	45732026	Am. Kit. 5275 (plus item 2), Am. Std. 55275-07 (plus item 2), Union Brass 405 (plus item 2).
5	45732028	Same as item 4 with longer stem
6	21942380	Valley V7713
7	45732034	Gerber 90-118, Speakman 05-1474.
8	45732022	Am. Std. 69360-07, Kohler 42144.
9	40140146	Moen 91192 (old # 1589)
10	NLA	American Standard 58332-07
	40120406	American Standard 42850-07 (Reliant single lever)
11	40120542	American Standard 13200-07 (Single lever)
12	40130652	Price Pfister 951-111, Elkay A51593
	12890664	Price Pfister Avante single lever - not shown
13	40130125	Delta RP320 (single lever)
	40130158	Delta RP6073 (Delex 2 handle) - not shown
14	40140255	Briggs 6826, Crane FB9609, Harcraft 2601-7, Kohler 39981, Speakman 05-1283, Union Brass 403
15	40140333	Burlington Brass 58-9, Crane FB10974, Kohler 38636.
16	NLA	Kohler 20854, Price Pfister 951-010.
17	45732010	American Standard 12435-07,53828-07, Eljer 8055.
18	45732012	Sayco 207
19	45732014	Various manufacturers
20	45732016	Delta 6073, Elkay 51981, Federal 25-1741, Sterling S-3786, Speakman 05-1584.
21	45732018	Universal Rundle XP5765
22	45732020	Elkay 51486

** The manufacturer shown for each diverter is not complete. Please match your diverter with those shown to ensure the proper replacement.*

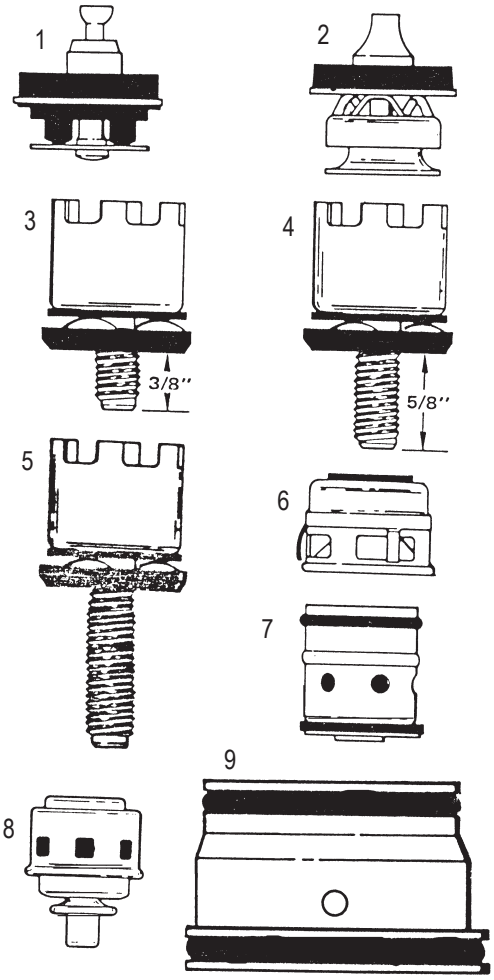

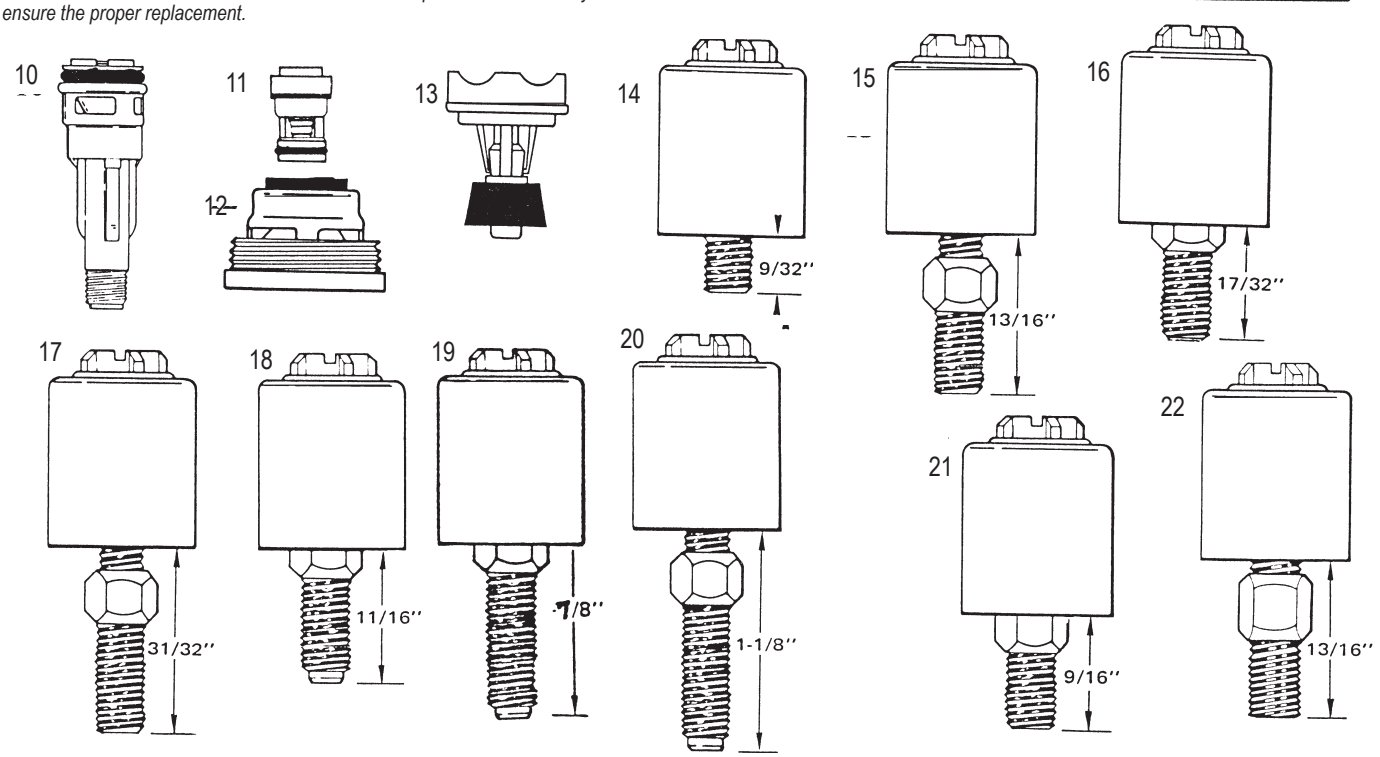

TOTAL MAINTENANCE SOLUTIONS

HOUSTON 800/392-5066
ORLANDO 800/327-3022
GREENVILLE 800/476-2212

LOOK FOR US ON THE WEB AT: www.TMSSouth.com

SINK LUGS

PART #	TYPE OF LUG	COUNTER THICKNESS
40110176	1612 Combo	5/8" to 1-1/8"
34771020	B	7/8" to 1"
34771050	D	3/8" to 1/2"
34771060	E	1/2" to 5/8"
34771062	No. 65	3/4" to 2-3/4"
40110160	U-Channel	N/A

ACCESSORIES

PART #	DESCRIPTION
34771012	Corner clip with bolts
34771000	Bolts for lugs
40110203	Bolt caps

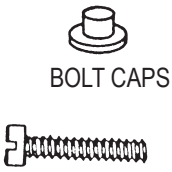

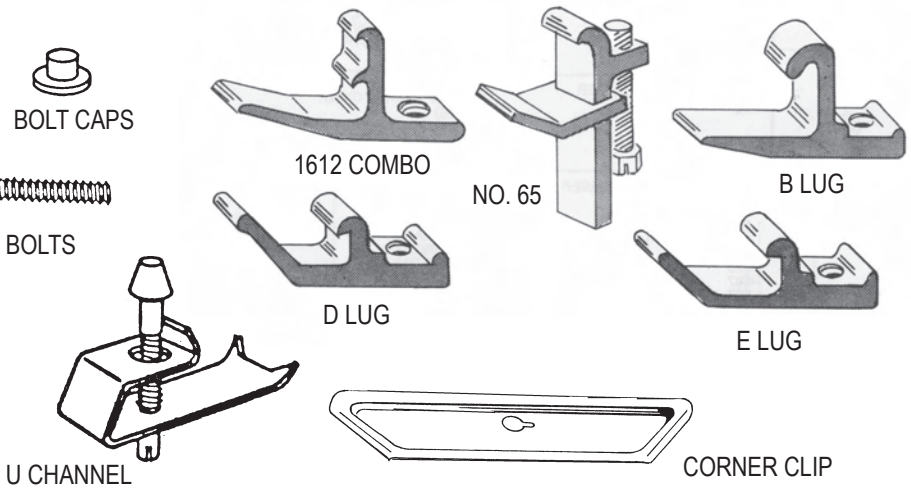

SINK FRAMES

TYPE	PART #	SIZE
A	34771086	21" x 42"
B	34771080	21" x 24"
B	34771082	23" x 24"
B	34771084	21" x 32"
B	34771088	17-7/8" Round
B	34771090	18" Round
B	34771092	16" x 19" Oval
B	34771093	16-1/4"x 19-1/4" Oval
C	34771094	21" x 32" Goof Frame
C	34771096	17-7/8" Round Goof Frame
C	34771098	18" Round Goof Frame
C	34771100	16" x 19" Oval Goof Frame

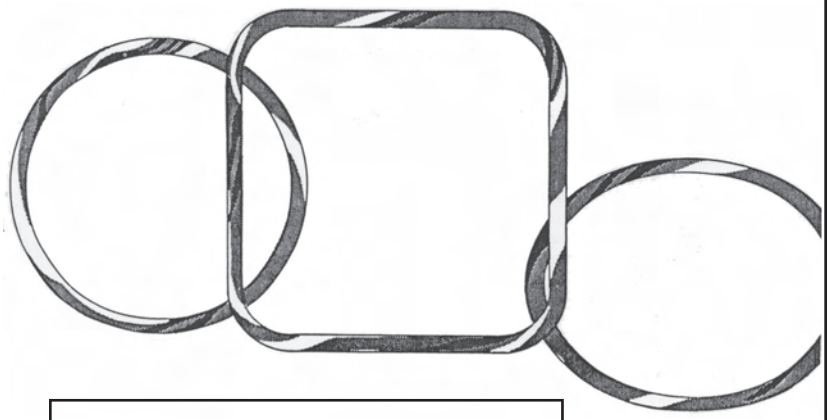

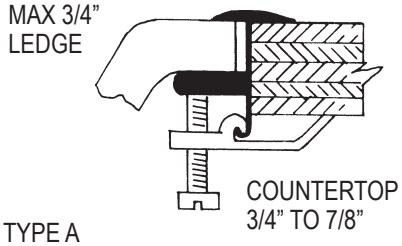

TYPE A
For vitreous china, cast iron, porcelained steel, or stainless steel bowl with ledges up to 3/4" thick. Comes with E lugs and bolts.

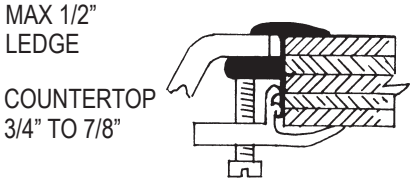

TYPE B
For cast iron, porcelained steel, or stainless steel bowl with ledges up to 1/2" thick. Comes with 1612 Combo lugs and bolts.

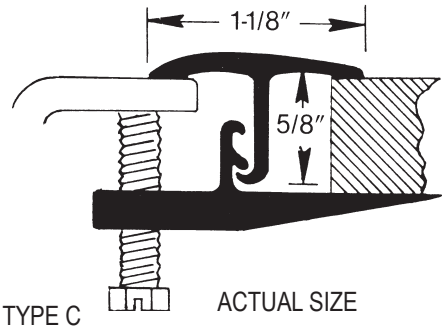

TYPE C
Goof Frame corrects cut-out mistakes. Will correct oversized cut-outs up to 3/4". For cast iron, porcelained steel & stainless steel bowls with ledges up to 1/2" thick.

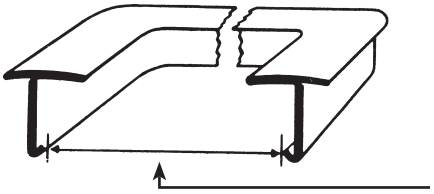

Measure this dimension for Frame Size

FAUCET REPAIR

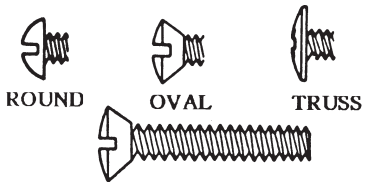

CHROME PLATED FAUCET HANDLE SCREWS

PART #	LENGTH	THRDS	HEAD
50100033	1/2”	8-32	Oval
40121093	1/2”	8-32	Pan
42720140	1”	10-32	Truss
50100003	3/8”	8-32	Oval
50100041	1/2”	8-32	Truss
50100002	7/8”	8-32	Oval
50100000	1/2”	10-24	Truss
42960110	1”	8-32	Truss
50100027	1/2”	10-24	Oval
50100030	3/4”	10-32	Oval
42960080	1"	10-24	Oval
50100043	1-1/2"	10-24	Oval
50100044	2”	10-24	Oval
42960105	2-1/2"	10-24	Oval
50100032	1"	10-24	Round
50100007	3/8”	10-32	Round
42960130	1”	10-32	Oval
50100028	3/4"	10-24	Oval

HANDLE SCREW ASSORTMENT KIT
Contains 150 pieces, 12 sizes.
PART # 50100039

BRASS BIBB SCREWS

PART #	LENGTH	THRDS	HEAD
50100008	1/4”	8-32	#8
50100009	1/2”	8-32	#8
50100010	3/8”	10-24	#8
50100034	1/2”	10-24	#8
50100011	3/8”	8-32	#7
42720270	3/8”	10-28	#8
42720280	1/2”	10-28	#8
50100012	3/8”	10-32	#8
50100013	1/2”	10-32	#8
50100014	3/8”	6-32	#6
50100015	1/2”	6-32	#6

155 PIECE, 12 SIZES ASSORTMENT.
PART # 42720330

SELF-LOCKING BIBB SCREWS — MONEL

PART #	LENGTH	THRDS	HEAD
50100018	3/8”	10-24	#8
50100019	1/2”	10-24	#8
42720362	3/8”	10-28	#8
42720364	1/2”	10-28	#8
50100020	3/8”	8-32	#8
50100021	1/2”	8-32	#8
42720390	3/8”	10-32	#8
50100023	1/2”	10-32	#8

215 PIECE, 3/8”, 1/2” X 10-24
ASSORTMENT WITH TAP.
PART # 42720375

FIT-ALL REPLACEMENT HANDLES (SET SCREW TYPE)

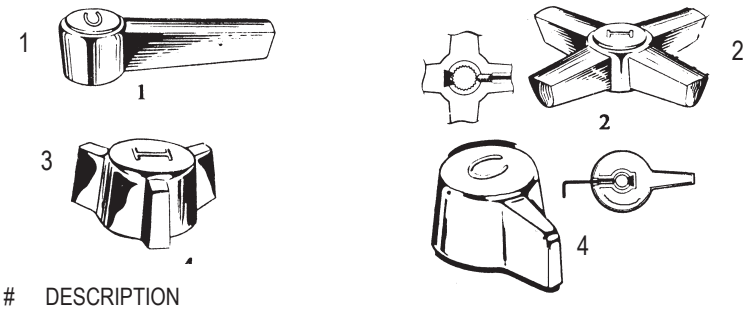

ITEM	PART #	DESCRIPTION
1	34160100	Lever type handle (pair)
2	34160110	Cross type handle (pair)
3	34160130	Cross type canopy handle (pair)
4	34160140	Lever type canopy handle (pair)

“TWIN -GRIP” FIT-ALL HANDLES

ITEM	PART #	DESCRIPTION
1	34730100	Lever type handle (pair)
2	34730110	Cross type handle (pair)

Did You Know?

Water expands by 9% when it freezes. Frozen water (ice) is lighter than water, which is why ice floats in water.

HANDLE BUSHINGS (INSERTS)

BRASS PART #	CELCON PART #	INSERT #	FAUCET MANUFACTURER
34511000	34991000	1-1	Small Crane – Dialese, Michigan Brass
40110137	34991010	1-2	Price Pfister
34511030	34991030	1-4	American Standard 7/16" (Aquaseal)
34511400		5-1	American Standard w/ extension (Aquaseal)
34511040	34991040	1-5	Sterling-Rockwell
34511050		1-6	Central, Eljer, Burlington
34511060	34991060	1-7	Kohler
34511070	34991070	1-8	American Standard 3/8" – old style
34511080		1-12	Harcraft
34511090	34991090	1-13	Savoy, Wolverine
34511100	34991100	2-1	American Standard 9/16" (Aquaseal)
	34991110	2-2	Youngstown
34511130	34991130	2-4	Speakman, T&S
34511140	34991140	2-5	Price Pfister, Grand Haven, Harcraft, Crane, Repeal
34511150		2-6	American Standard Colony, Kohler Trend (shoreham)
34511160	34991160	3-1	Small Crane-Repeal
34511170	34991170	3-2	Sayco, Gerber
34511180	34991180	3-3	Union, Richmond, Indiana, Briggs, Belvedere
34511190	34991190	3-4	Dick Bros., Central, Eljer, Milwaukee
	34991200	3-5	Michigan Brass, Wolverine (new style)
34511210	34991210	3-7	American Brass, Steamway, Nibco, Indiana
34511220		3-9	Harcraft
34511230	34991230	3-10	Universal Rundle, Bradley, Sears, Elkay, Milwaukee
	34991240	3-11	Michigan Brass (old style)
	34991250	3-12	Chicago
	34991260	3-17	Sterling-Cleveland
	34991270	4-1	Peerless
34511540	34991280	4-2	Delta, Valley, Nibco
34511500	34991290	4-3	Bradley, J.P.I.
	34991300	4-4	Moen, Standadyne, Tub/shwr.
34511520	34991310	4-5	Moen, Standadyne, Lav.
	34991320	4-6	Price Pfister, (Avanti)
34511510	34991400	5-1	Delta (Delex)
	34991410	5-2	Valley II
	34991430	5-4	Milwaukee, Sears Best
34511270			Fit-all self tapping

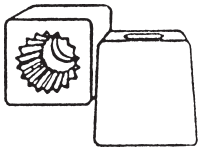

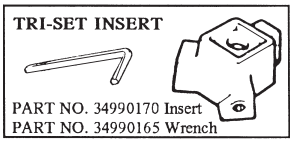

STEM EXTENDERS

PART #	INSERT #	DESCRIPTION
34511999	1-1	Crane, Repcal
34512000	1-2	Price Pfister, Harcraft
34512005	1-4	American Standard 7-1/6"
34512010	1-5	Sterling
34512020	1-6	Central, Kohler (Trend)
34512030	1-7	Kohler
40110140	2-3	Sayco, Gerber
34512038	3-3	Briggs, Union Brass
34512040	3-7	American Brass, Streamway

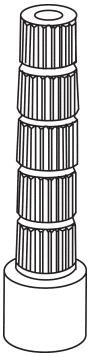

FIT-ALL REPLACEMENT HANDLES (FOR USE WITH BRASS OR CELCON BUSHINGS)

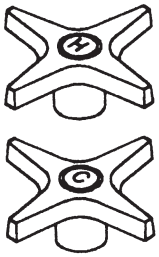

PART #	DESCRIPTION
34990713	Pair – cross handles

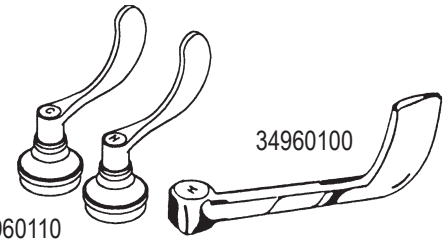

PART #	DESCRIPTION
34960100	Pair of 4" wrist handles-Hot & Cold index less screws and bushings
34960110	Wrist handle

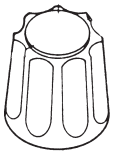

CANOPY

PART #	DESCRIPTION
34990425	Small 7-point Canopy handles – pair
34990445	7-Point Lever handles – pair
34990448	7-Point Lever handle – diverter

PART #	DESCRIPTION
34990300	Small clear acrylic handles – pair

PART #	DESCRIPTION
34990330	Clear acrylic tub & shower widespread handles – pair
34990320	Clear acrylic tub & shower widespread handle – diverter
34990335	Clear acrylic tub & shower widespread handles – long broach – pair

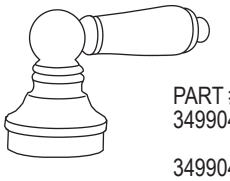

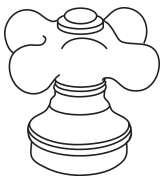

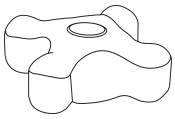

PART #	DESCRIPTION
34990460	Small porcelain cross handles – CP base (pair)
34990470	Small porcelain cross handle – CP base – hot, cold, diverter
34990480	Large porcelain cross handles – CP base (pair)
34990490	Same as 34990490, diverter only
34990800	CP porcelain lever handles (pair)
34990810	PB cross handles (pair)
34990820	PB porcelain lever handles (pair)
34990475	Small porcelain lever handles (pair)

FAUCET REPAIR

NEOPRENE FAUCET WASHERS

FLAT PART #	BEV. PART #	TRADE SIZE	ACTUAL DIAMETER
40110177	42691000	1/8	15/32"
40110118	40110128	00	1/2"
40110094	42691020	0	17/32"
40110016	40110129	1/4	9/16"
40110163	40110168	1/4L	19/32"
40110162	40110139	3/8	5/8"
40700145	42691060	3/8M	21/32"
40110136	42691070	3/8L	11/16"
40110204	40300331	1/2	3/4"
42690190	42691090	1/2L	25/32"
40110127	42691100	5/8	13/16"
40110205		3/4	1"
42690215	42691110	1	1-1/8"

FAUCET WASHERS (ACTUAL SIZE)

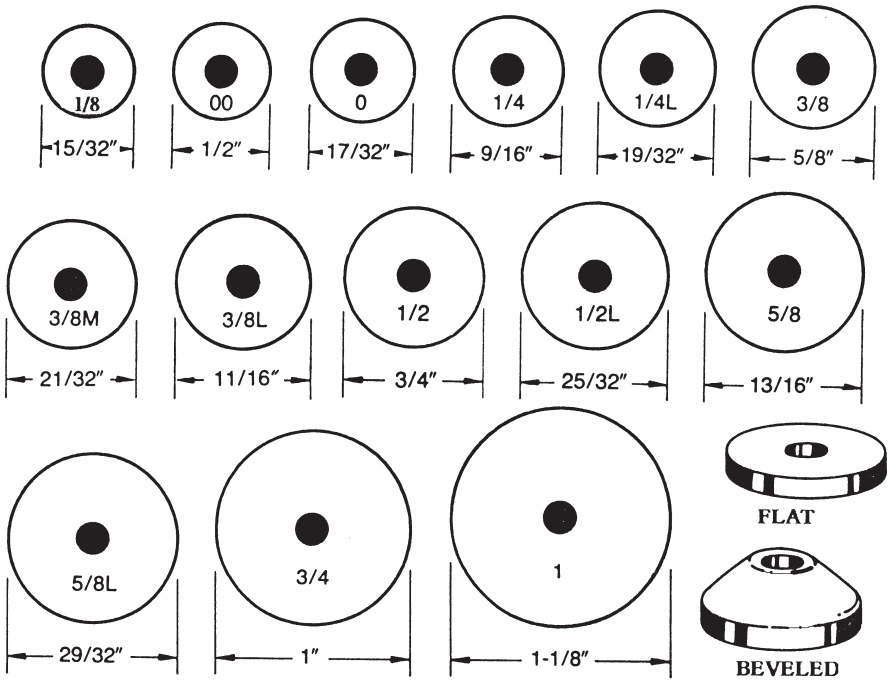

COMPOUND FIBRE WASHERS "TEFLON WASHERS"

FLAT PART #	TRADE SIZE	ACTUAL DIAMETER
40110169	00	1/2"
40110148	0	17/32"
40110178	1/4	9/16"
40110170	1/4L	19/32"
40110179	3/8	5/8"

PART #	DESCRIPTION
42720500	200 Flat Fibre washer assortment, 9 sizes
42720520	200 Beveled washer assortment
50100045	200 Flat washer assortment
42720540	200 Combination Beveled & Flat washer assort.

BRASS RETAINER CUPS

PART #	WASHER SIZE
50100042	00
50100045	0
42720430	1/4
42720440	1/4L
42720450	3/8
42720460	3/8M
42720470	3/8L

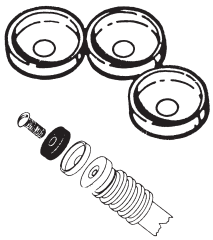

PART #	DESCRIPTION
50100040	Small Flat washer assortment. Sizes 00-1/4L, 17 washers & 4 bibb screws.
42720570	Small Beveled washer assortment. Sizes 00-1/4L, 17 washers & 4 bibb screws.

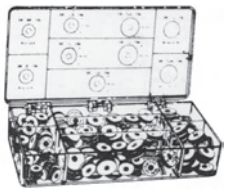

ITEM	PART #	O.D	I.D	THICK
1	40950095	1/4"	1/8"	1/16"
2	40950016	9/32"	5/32"	1/16"
3	40950017	5/16"	3/16"	1/16"
4	40950018	11/32"	7/32"	1/16"
5	40950019	3/8"	1/4"	1/16"
6	40950020	7/16"	5/16"	1/16"
7	40950021	1/2"	3/8"	1/16"
8	40950047	9/16"	7/16"	1/16"
9	40950035	5/8"	1/2"	1/16"
10	40950106	5/8"	33/64"	3/64"
11	40950041	11/16"	9/16"	1/16"
12	40950049	3/4"	5/8"	1/16"
13	40950027	13/16"	11/16"	1/16"
14	40950109	51/64"	41/64"	5/64"

O-RINGS 1/16" (ACTUAL SIZE)

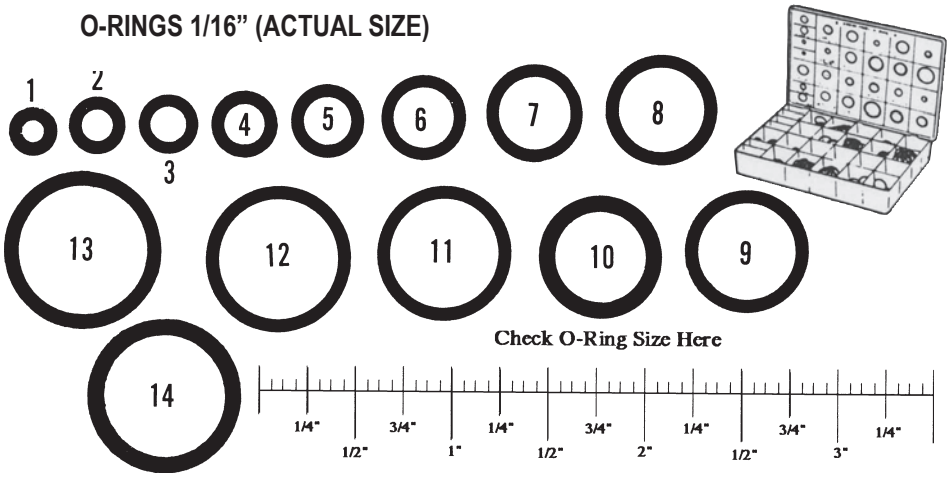

O-RING ASSORTMENTS

PART #	DESCRIPTION
41001400	200 O-Ring Assortment - 14 Sizes
40950113	84 O-Ring Assortment - 42 Sizes

O-RINGS 1/16 (ACTUAL SIZE) – CONT.

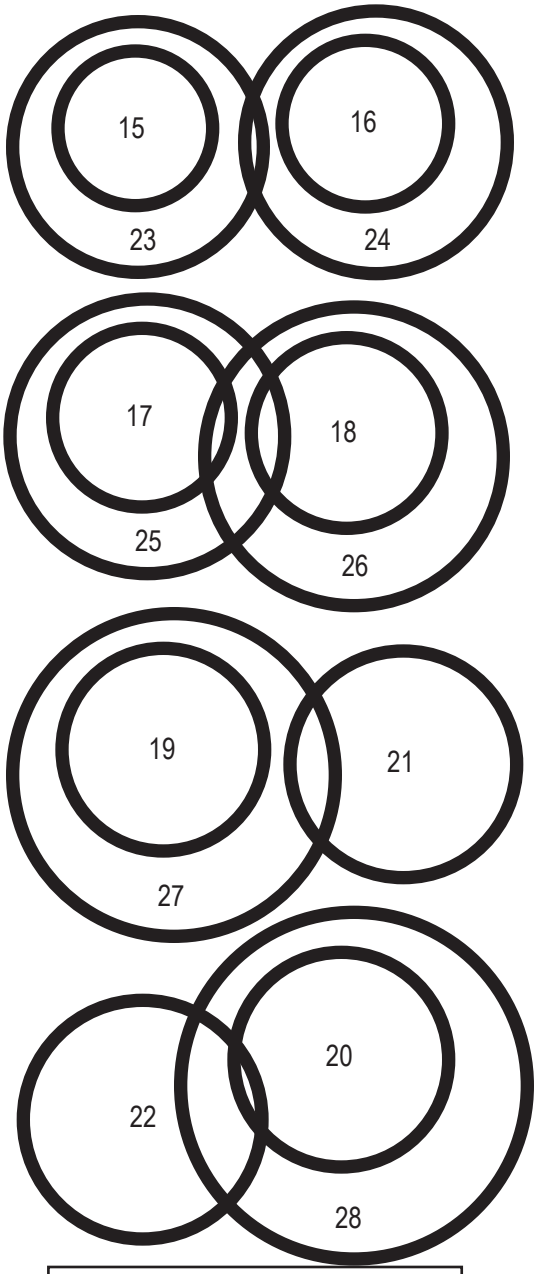

ITEM	PART #	O.D.	I.D.	THICK
15	40950038	7/8"	3/4"	1/16"
16	40950052	15/16"	13/16"	1/16"
17	40950053	1"	7/8"	1/16"
18	40950037	1-1/16"	15/16"	1/16"
19	40950055	1-1/8"	1"	1/16"
20	40950040	1-3/16"	1-1/16"	1/16"
21	40950064	1-1/4"	1-1/8"	1/16"
22	40950066	1-5/16"	1-3/16"	1/16"
23	40950068	1-3/8"	1-1/4"	1/16"
24	40950063	1-7/16"	1-5/16"	1/16"
25	40950071	1-1/2"	1-3/8"	1/16"
26	40950073	1-5/8"	1-1/2"	1/16"
27	40950079	1-3/4"	1-5/8"	1/16"
28	40950082	1-7/8"	1-3/4"	1/16"

O-RINGS 3/32" (ACTUAL SIZE)

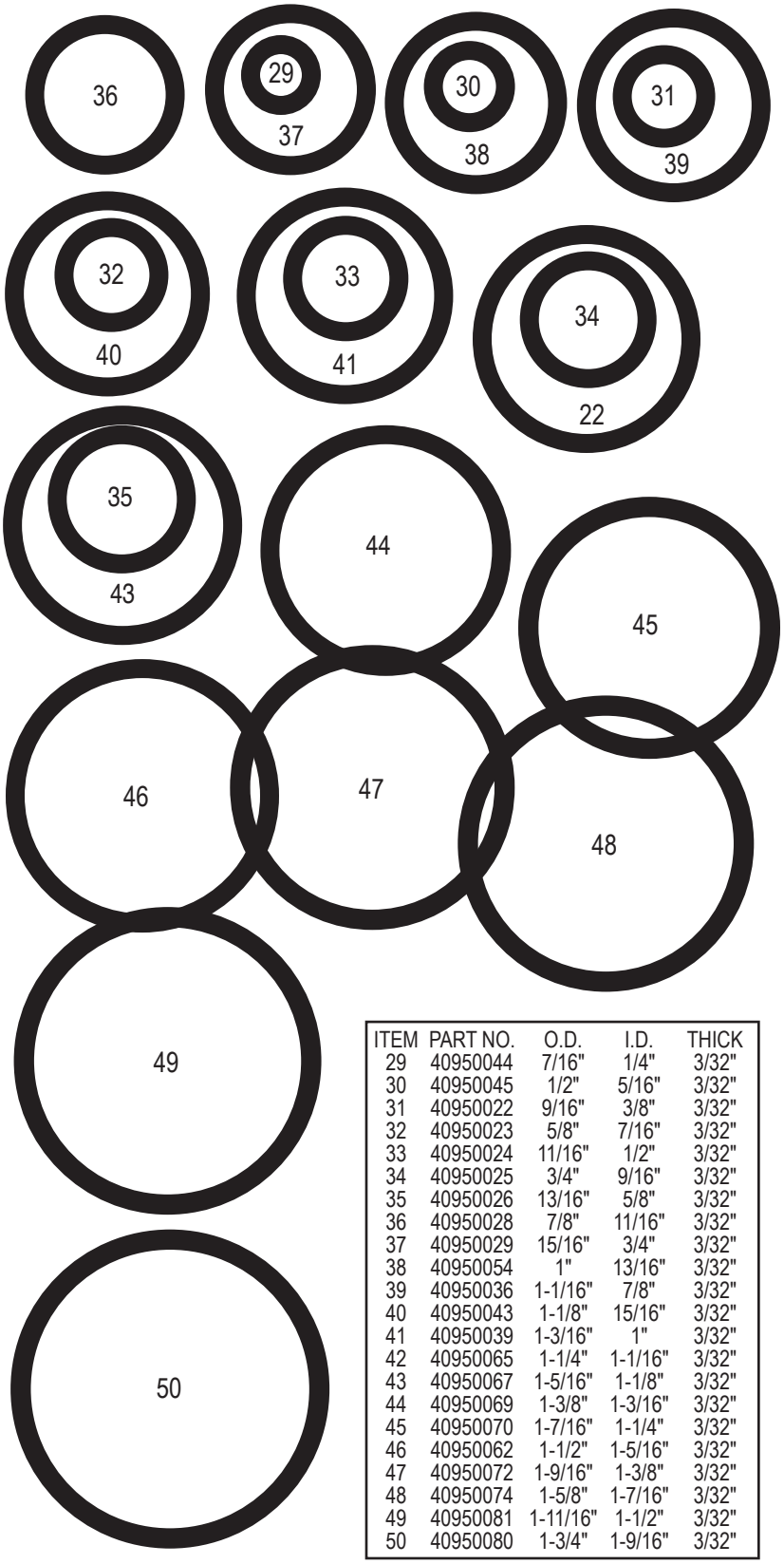

ITEM	PART NO.	O.D.	I.D.	THICK
29	40950044	7/16"	1/4"	3/32"
30	40950045	1/2"	5/16"	3/32"
31	40950022	9/16"	3/8"	3/32"
32	40950023	5/8"	7/16"	3/32"
33	40950024	11/16"	1/2"	3/32"
34	40950025	3/4"	9/16"	3/32"
35	40950026	13/16"	5/8"	3/32"
36	40950028	7/8"	11/16"	3/32"
37	40950029	15/16"	3/4"	3/32"
38	40950054	1"	13/16"	3/32"
39	40950036	1-1/16"	7/8"	3/32"
40	40950043	1-1/8"	15/16"	3/32"
41	40950039	1-3/16"	1"	3/32"
42	40950065	1-1/4"	1-1/16"	3/32"
43	40950067	1-5/16"	1-1/8"	3/32"
44	40950069	1-3/8"	1-3/16"	3/32"
45	40950070	1-7/16"	1-1/4"	3/32"
46	40950062	1-1/2"	1-5/16"	3/32"
47	40950072	1-9/16"	1-3/8"	3/32"
48	40950074	1-5/8"	1-7/16"	3/32"
49	40950081	1-11/16"	1-1/2"	3/32"
50	40950080	1-3/4"	1-9/16"	3/32"

FAUCET REPAIR

O-RINGS 3/32”- CONTINUED

ITEM	PART #	O.D.	I.D.	THICK
51	41001067	1-13/16"	1-5/8"	3/32"
52	40950083	1-7/8"	1-11/16"	3/32"
*	40950089	2-1/16"	1-7/8"	3/32"
53	40950091	2-1/8"	1-15/16"	3/32"
*	41001082	2-3/16"	2"	3/32"
*	41001140	2-7/16"	2-1/4"	3/32"

* Not shown

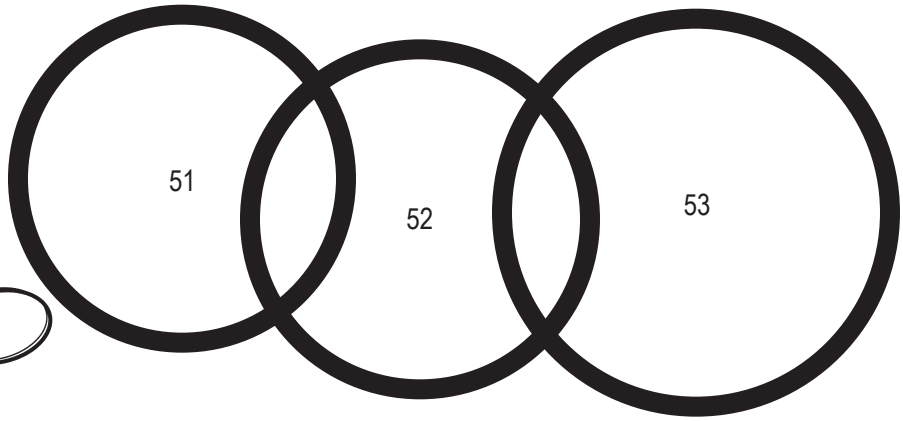

O-RING PICK
PART # 64001412

O-RINGS 1/8” - 3/16” (ACTUAL SIZE)

ITEM	PART #	O.D.	I.D.	THICK
54	40950046	1/2"	1/4"	1/8"
55	40950034	9/16"	5/16"	1/8"
56	41001068	5/8"	3/8"	1/8"
57	40950048	11/16"	7/16"	1/8"
58	40950050	3/4"	1/2"	1/8"
59	41001070	13/16"	9/16"	1/8"
60	40950051	7/8"	5/8"	1/8"
61	41001072	15/16"	11/16"	1/8"
62	40950030	1"	3/4"	1/8"
63	40950031	1-1/16"	13/16"	1/8"
64	40950032	1-1/8"	7/8"	1/8"
65	40950033	1-3/16"	15/16"	1/8"
66	40300014	1-1/4"	1"	1/8"
67	40950057	1-5/16"	1-1/16"	1/8"
68	40950058	1-3/8"	1-1/8"	1/8"
69	40950059	1-7/16"	1-3/16"	1/8"
70	40950060	1-1/2"	1-1/4"	1/8"
71	40950061	1-9/16"	1-5/16"	1/8"
72	40950075	1-5/8"	1-3/8"	1/8"
73	40950076	1-11/16"	1-7/16"	1/8"
74	40950077	1-3/4"	1-1/2"	1/8"
75	40950084	1-7/8"	1-5/8"	1/8"
76	40950088	2"	1-3/4"	1/8"
*	41001335	2-9/64"	2"	1/8"
*	41001228	2-1/2"	2-1/4"	1/8"
*	41001231	2-7/8"	2-5/8"	1/8"
*	41001235	3-3/8"	3-1/8"	1/8"
*	41001334	22/32"	15/32"	9/64"
*	41001309	13/16"	7/16"	3/16"
*	41001031	2-1/8"	1-3/4"	3/16"
*	41001328	2-1/4"	1-7/8"	3/16"
*	41001329	2-3/8"	2"	3/16"
*	41001331	2-5/8"	2-1/4"	3/16"
*	41001332	2-3/4"	2-3/8"	3/16"
*	41001333	2-7/8"	2-1/2"	3/16"

* Not shown

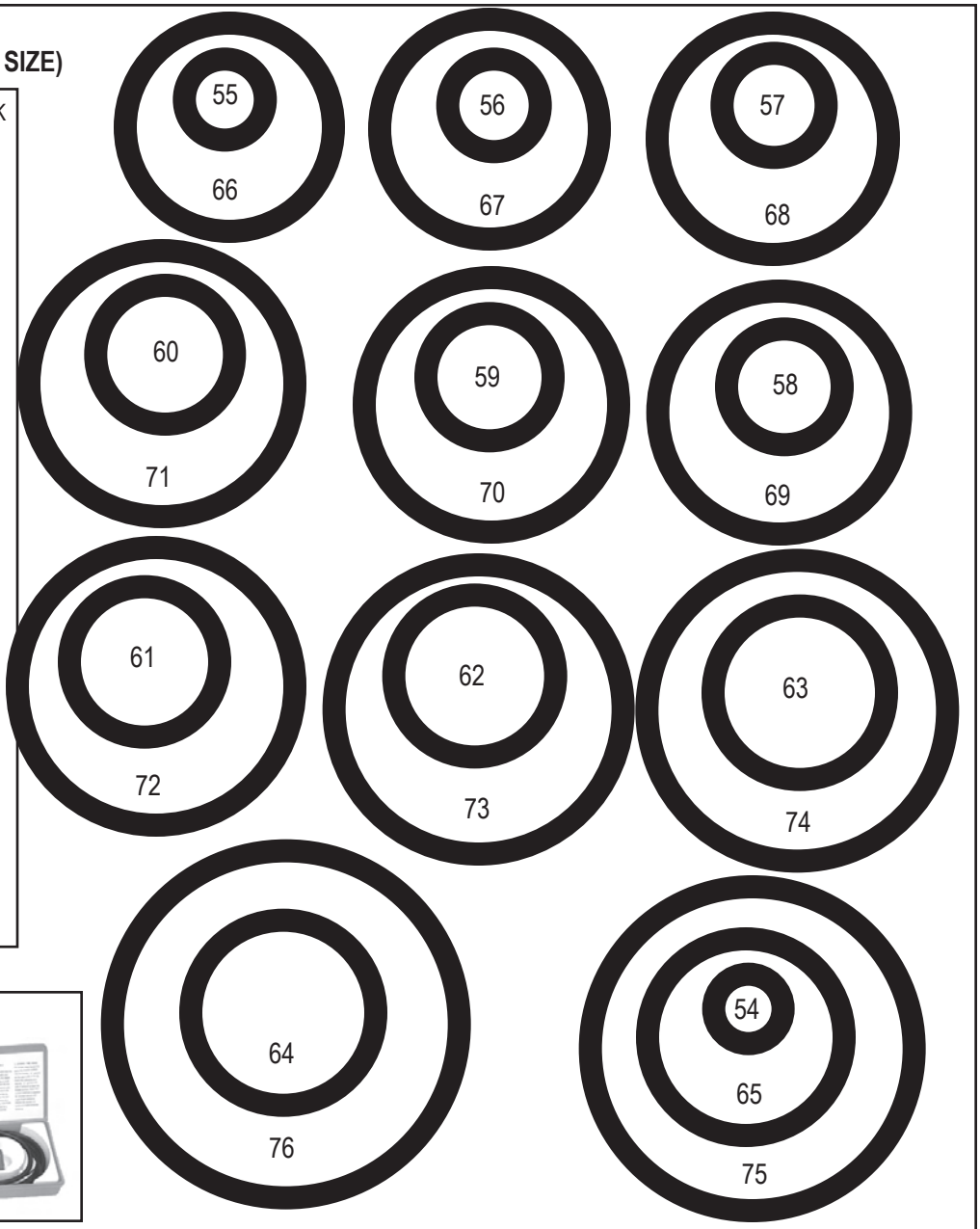

O-RING SPLICING KIT
PART # 41001631

AMERICAN STANDARD TUB & SHOWER TRIM KITS

3-HANDLE KIT (INCLUDES ALL PARTS SHOWN)
PART # 40120639

2-HANDLE KIT (INCLUDES ALL PARTS SHOWN)
PART # 40120651

3-HANDLE JUNIOR KIT (INCLUDES ALL PARTS SHOWN)
PART # 40120640

2-HANDLE JUNIOR KIT (INCLUDES ALL PARTS SHOWN)
PART # 40120638

FAUCET REPAIR

CENTRAL BRASS TUB & SHOWER TRIM KITS

3-HANDLE KIT (INCLUDES ALL PARTS SHOWN)
PART # 40120641

2-HANDLE KIT (INCLUDES ALL PARTS SHOWN)
PART # 40120649

3-HANDLE JUNIOR KIT (INCLUDES ALL PARTS SHOWN)
PART # 40120642

2-HANDLE JUNIOR KIT (INCLUDES ALL PARTS SHOWN)
PART # 40120650

GERBER TUB & SHOWER TRIM KITS

3-HANDLE KIT (INCLUDES ALL PARTS SHOWN)
PART # 40130183

2-HANDLE KIT (INCLUDES ALL PARTS SHOWN)
PART # 401300190

3-HANDLE JUNIOR KIT (INCLUDES ALL PARTS SHOWN)
PART # 401300184

2-HANDLE JUNIOR KIT (INCLUDES ALL PARTS SHOWN)
PART # 401300182

FAUCET REPAIR

GERBER TUB & SHOWER TRIM KITS

3-HANDLE KIT (INCLUDES ALL PARTS SHOWN)
PART # 40130191

2-HANDLE KIT (INCLUDES ALL PARTS SHOWN)
PART # 40130192

3-HANDLE JUNIOR KIT (INCLUDES ALL PARTS SHOWN)
PART # 40130028

2-HANDLE JUNIOR KIT (INCLUDES ALL PARTS SHOWN)
PART # 40130193

PRICE PFISTER TUB & SHOWER TRIM KITS

3-HANDLE KIT (INCLUDES ALL PARTS SHOWN)
PART # 40150170

2-HANDLE KIT (INCLUDES ALL PARTS SHOWN)
PART # 40150006

3-HANDLE JUNIOR KIT (INCLUDES ALL PARTS SHOWN)
PART # 40150171

2-HANDLE JUNIOR KIT (INCLUDES ALL PARTS SHOWN)
PART # 40150169

FAUCET REPAIR

PRICE PFISTER TUB & SHOWER TRIM KITS

3-HANDLE KIT (INCLUDES ALL PARTS SHOWN)
PART # 40150039

2-HANDLE KIT (INCLUDES ALL PARTS SHOWN)
PART # 40150041

3-HANDLE JUNIOR KIT (INCLUDES ALL PARTS SHOWN)
PART # 40150044

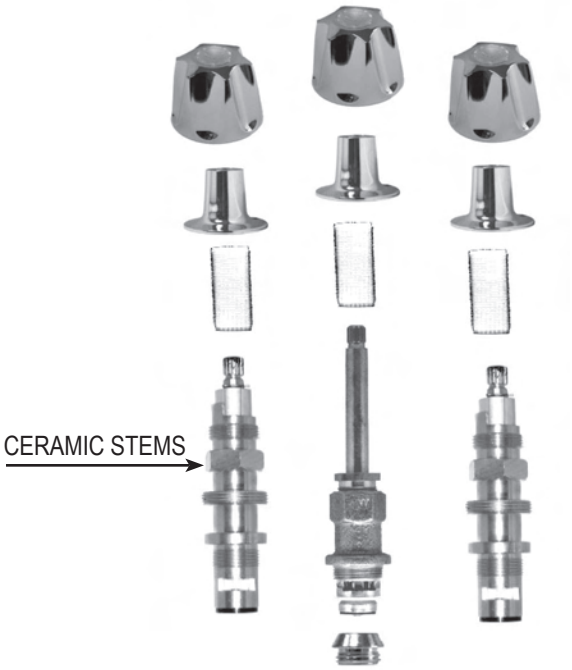

2-HANDLE JUNIOR KIT (INCLUDES ALL PARTS SHOWN)
PART # 40170172

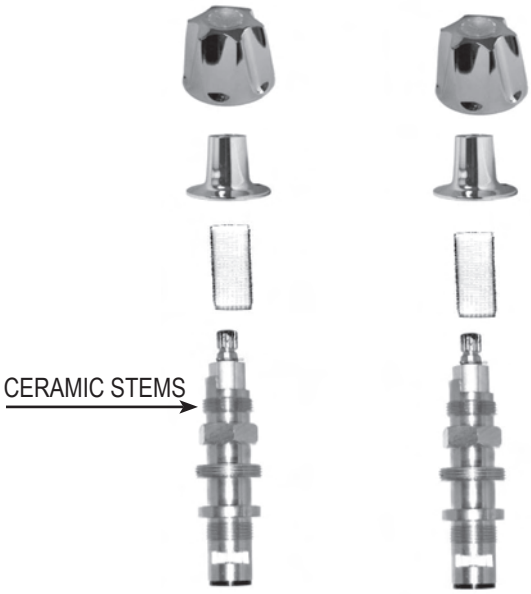

SAYCO TUB & SHOWER TRIM KITS

3-HANDLE KIT (INCLUDES ALL PARTS SHOWN)
PART # 40150174

2-HANDLE KIT (INCLUDES ALL PARTS SHOWN)
PART # 40150009

3-HANDLE JUNIOR KIT (INCLUDES ALL PARTS SHOWN)
PART # 40150175

2-HANDLE JUNIOR KIT (INCLUDES ALL PARTS SHOWN)
PART # 40150173

FAUCET REPAIR

SAYCO TUB & SHOWER TRIM KITS

3-HANDLE KIT (INCLUDES ALL PARTS SHOWN)
PART # 40150019

2-HANDLE KIT (INCLUDES ALL PARTS SHOWN)
PART # 40150024

3-HANDLE JUNIOR KIT (INCLUDES ALL PARTS SHOWN)
PART # 40150028

2-HANDLE JUNIOR KIT (INCLUDES ALL PARTS SHOWN)
PART # 40151184

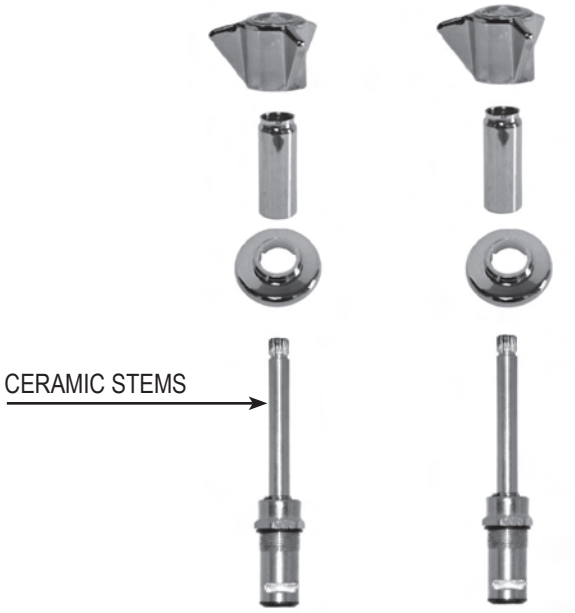

STERLING FAUCET TUB & SHOWER TRIM KITS

3-HANDLE KIT (INCLUDES ALL PARTS SHOWN)
PART # 40151185

2-HANDLE KIT (INCLUDES ALL PARTS SHOWN)
PART # 40167385

3-HANDLE JUNIOR KIT (INCLUDES ALL PARTS SHOWN)
PART # 40151183

2-HANDLE JUNIOR KIT (INCLUDES ALL PARTS SHOWN)
PART # 40150042

NOTES